Procedure for VS6-VS7 Suction Can Lifting

COPY COMPLIANT to the original document resident on the computer system at the time of printing

Index

1 Scope 3

2 Definitions 3

3 Lifting configurations and procedures 3

3.1 General recommendations 4

3.2 Vertical lifting 4

3.3 Horizontal lifting 6

3.4 Transitions from horizontal to vertical lifting 6

4 Design Solutions for Horizontal Lifting 6

4.1 Standard Lifting Point Solution 7

4.2 Alternative Lifting Point Solution 9

5 Welding requirements 11

6 Responsibilities 12

6.1 Product Engineering 12

6.2 Quality control 13

6.3 Manufacturing 13

7 References 13

COPY COMPLIANT to the original document resident on the computer system at the time of printing

1. Scope

This Standard Operating Procedure (**SOP**) applies to all engineering and operations personnel within the Italian Organization who are involved in the design, fabrication, and handling of **VS6** / **VS7** pump suction cans (also referred to as *suction tanks* or *barrels*). Handling activities include both the lifting management of the suction can as a standalone component and the lifting of the **VS6** / **VS7** pressure casing assembly (barrel mounted together with the discharge head / elbow plus covers for hydrostatic test).

The **SOP** defines the technical requirements and safety protocols for implementing suitable lifting provisions on all suction cans manufactured by the Organization, with the aim of preventing safety risks during workshop handling and / or installation activities. The procedure includes a standard and an alternative lifting point configurations, welding and structural requirements, and references to internal design practices and API 610 standard.

2. Definitions

FEM Finite Element Method

MT Magnetic particle Test

NDT Non-Destructive Test

PD Product Design (team)

PT Product Technology (team)

SOP Standard Operation Procedure

UT Ultrasonic Test

VS Vertically Suspended (API 610 vertical pumps)

WLL Working Load Limit

3. Lifting configurations and procedures

Two primary lifting configurations and lifting transitions were evaluated:

- Vertical lifting (ref. paragraph 3.2).
- Horizontal lifting (ref. paragraph 3.3).
- Transitions from vertical to horizontal lifting (ref. paragraph 3.4).

COPY COMPLIANT to the original document resident on the computer system at the time of printing

3.1. General recommendations

Operators responsible for lifting operations in the workshop or at the plant during installation must ensure that all lifting devices—such as slings, hooks, and shackles—are certified, properly rated for the load, and have been inspected prior to use. Additionally, operators must strictly adhere to all relevant safety rules and best practices when using lifting equipment. When using certified lifting equipment, the related manuals shall be strictly observed. Observing these safety measures is essential to prevent accidents and ensure a safe working environment for everyone involved in the lifting operation.

Lifting operations should be conducted slowly and with supervision to minimise the risk of unexpected load movement. Guide ropes or additional secure slings are recommended when needed to stabilise the suction can or the corresponding pressure casing while it is being moved. When lifting horizontally, extra care must be taken to prevent uncontrolled rotation, loss of stability and avoid contact with nearby equipment or floor.

When threaded lifting lugs shall be used, then swivel lifting points are mandatory (see *Figure 1*), as they provide safer alignment, reduce side loading, and are better suited for complex or space-constrained environments, typical of petrochemical plants. They can also accommodate lifting transitions from vertical to horizontal positions.

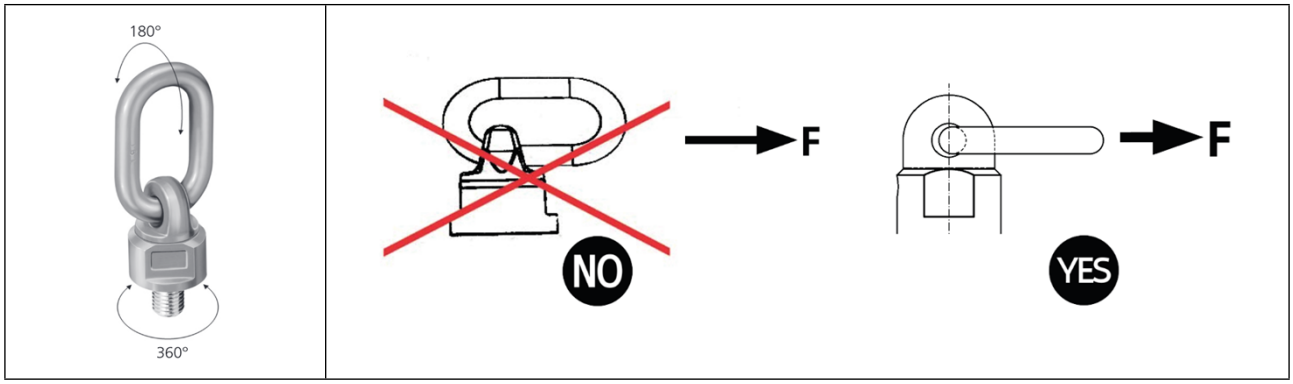

Figure 1: Typical certified swivel lifting lug and correct use (images from the Carcano manufacturer catalogue).

Attention should be given during the transition between horizontal and vertical orientations; additional information is available in paragraph 3.4.

3.2. Vertical lifting

Figure 2 shows a typical example of vertical lifting configuration. In this setup, the barrel can be handled during installation, such as when lowering it into a foundation or moving it in areas where there is enough clearance between the maximum hook height and the floor to keep the suction can in a vertical position. This configuration is appropriate for environments with available and

COPY COMPLIANT to the original document resident on the computer system at the time of printing

unobstructed vertical access, allowing for controlled and stable lifting operations. This setup is not applicable to pressure casings, which are typically handled in a horizontal position throughout workshop operations.

For vertical lifting, the suction can flange shall include threaded holes oriented parallel to the suction can axis, specifically designed for the installation of swivel lifting points. These holes must be rated for an appropriate **WLL**, based on the suction can's weight and lifting configuration. Reference to lifting lug product catalogues is required to define suitable **WLL** values and configurations.

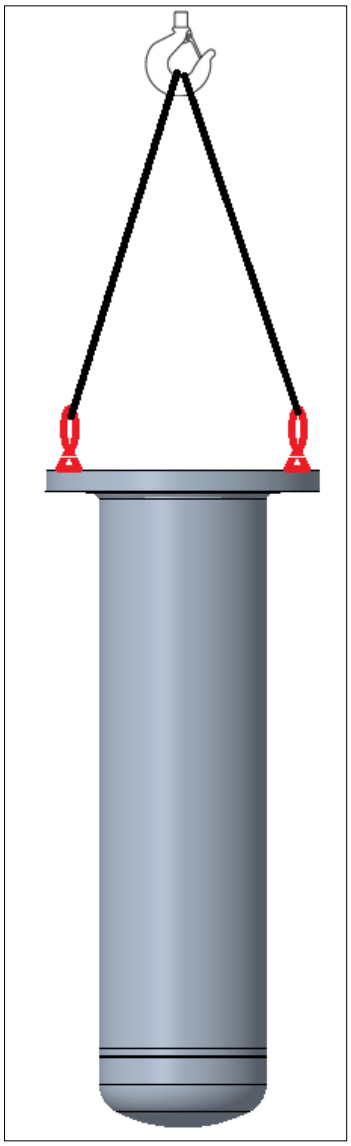

Figure 2: Typical vertical lifting configuration of suction can.

COPY COMPLIANT to the original document resident on the computer system at the time of printing

3.3. Horizontal lifting

Figure 3 and *Figure 6* show examples of horizontal lifting configurations. Horizontal lifting configurations are suitable during manufacturing or installation phases when vertical clearance between the maximum hook height and the floor is insufficient, or when the suction can must be laid down on the floor for operational reasons such as preparation for assembly, inspection, or transport. This method allows controlled handling of the barrel in environments with overhead restrictions or where vertical lifting is impractical.

This setup is also applicable to the lifting of **VS6** / **VS7** pressure casings, that are handled horizontally within the workshop, for example, when transferring them from the assembly area to the hydrostatic testing room.

While vertical lifting relies solely on lifting points installed on the suction can flange, horizontal lifting requires additional provisions located on the cylindrical shell or the head of the suction can.

To accommodate varying spatial constraints and operational requirements, two lifting point solutions are proposed and detailed in Chapter 4 “Design Solutions for Horizontal Lifting”.

3.4. Transitions from horizontal to vertical lifting

Lifting and handling the suction can component between horizontal and vertical orientations requires careful planning to ensure safety and prevent structural damage. The transition from vertical to horizontal is particularly critical, as it may involve connecting lifting slings to provisions located at the bottom of the **VS6** / **VS7** suction can or along its cylindrical shell while the barrel is being lifted from the ground. To avoid personnel working near suspended loads, it is recommended to first rest the bottom end on a pallet or stable support, then lower the upper flange onto an additional support on the floor. This arrangement ensures safe access to the lifting points and allows secure sling attachment without uncontrolled movements. Once connected, the rotation can proceed gradually under supervision, maintaining stability throughout the manoeuvre.

4. Design Solutions for Horizontal Lifting

To ensure safe and efficient handling of **VS6** / **VS7** pump suction cans, two technically sound lifting point configurations are proposed. Both solutions comply with good engineering practices and address different spatial and operational constraints, offering reliable support for horizontal lifting operations.

4.1. Standard Lifting Point Solution

The standard lifting point solution, illustrated in both *Figure 3* and *Figure 4*, includes a welded lifting lug positioned at the bottom of the suction can head, along with a couple of swivel lifting points

COPY COMPLIANT to the original document resident on the computer system at the time of printing

installed on the other side. This configuration is the primary option to be considered for horizontal lifting of suction cans and of **VS6** / **VS7** pressure casings and should be evaluated before considering the alternative solution described in paragraph 4.2.

This configuration is specifically designed for horizontal lifting of **VS6** / **VS7** pump suction cans in applications where space around the cylindrical shell is restricted—such as the narrow radial gap between the suction can and the foundation, typically less than 2 inches—or for critical applications with heavy equipment, where a dedicated design can be applied and properly verified.

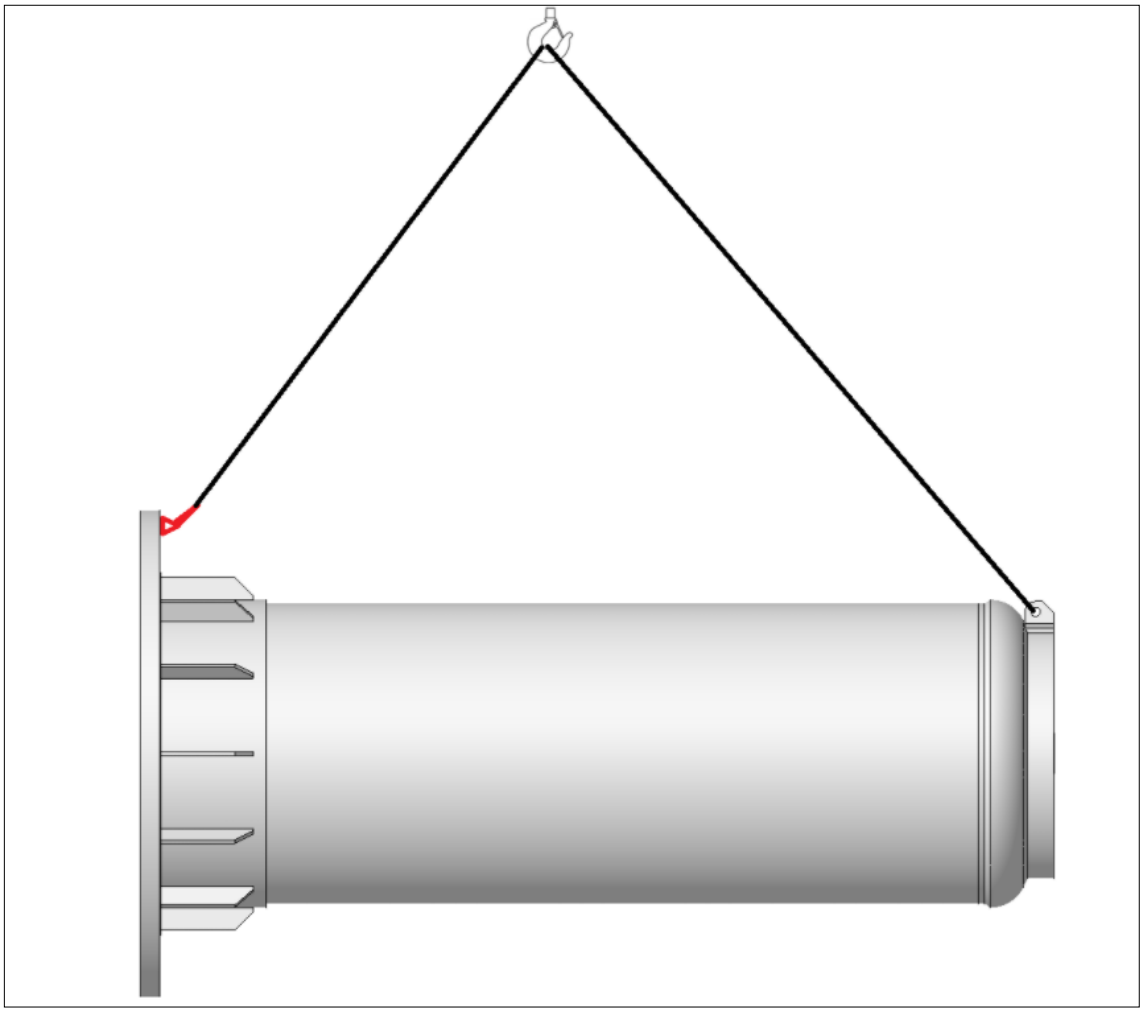

Figure 3: Typical horizontal lifting configuration (component) with standard lifting point solution.

COPY COMPLIANT to the original document resident on the computer system at the time of printing

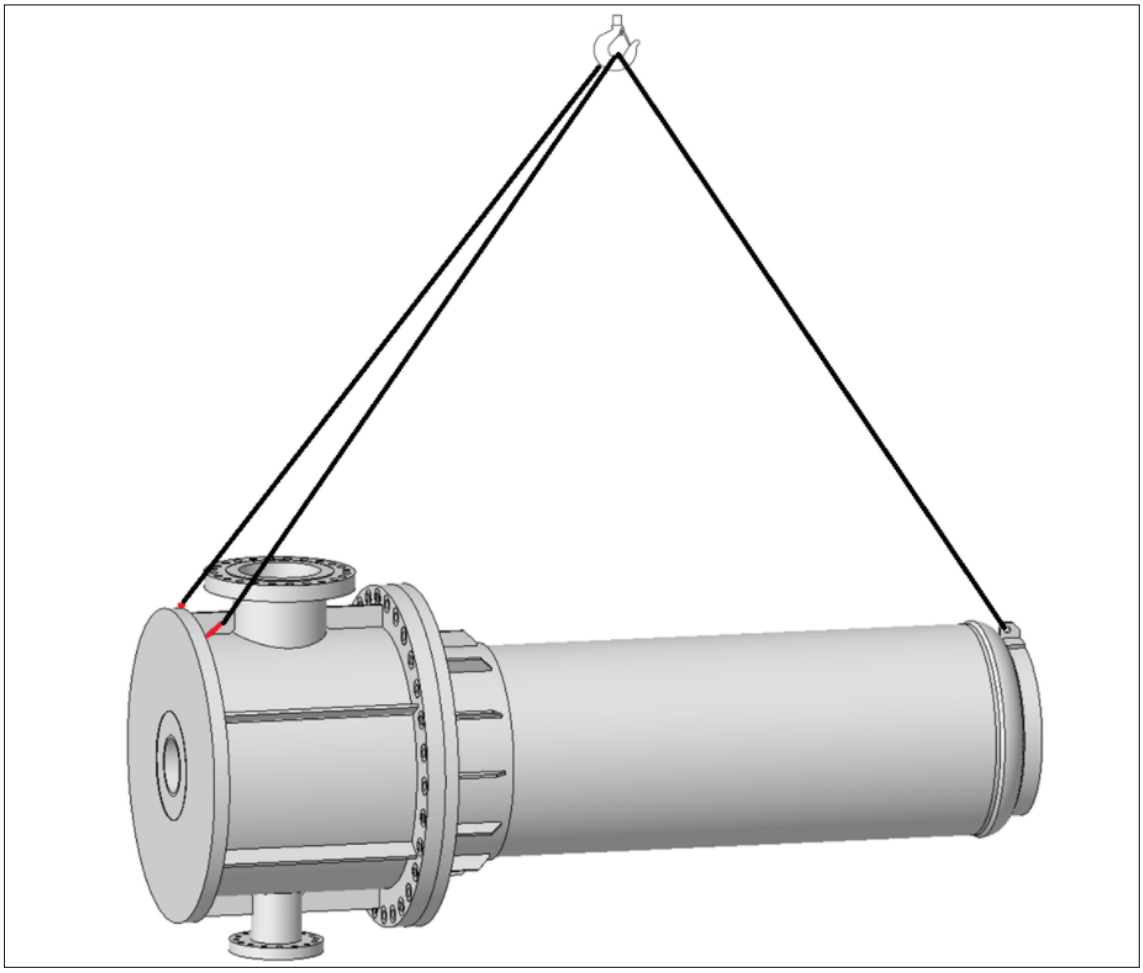

Figure 4: Typical horizontal lifting configuration (pressure casing) with standard lifting point solution.

With reference to Figure 5, the following are the main structural parts of the solution:

- **Support Ring**:
  - A cylindrical ring made of sheet metal is welded directly below the torispherical or ellipsoidal head.
  - The ring has a diameter smaller than the cylindrical shell.
  - Its centerline coincides with the suction can axis.
- **Lifting Lug Plate**:
  - A lifting lug, shaped as a flat plate with a central hole for attaching lifting devices (e.g., pins or hooks), is welded between the support ring and the bottom surface of the head.

COPY COMPLIANT to the original document resident on the computer system at the time of printing

- The lug plate lies in a radial plane intersecting the suction can axis, ensuring symmetrical load distribution and safe horizontal lifting when rotating the suction can from a vertical to a horizontal position and back.
- If needed due to structural concerns, additional local reinforcement can be added to increase the support ring thickness (see *Figure 5*).

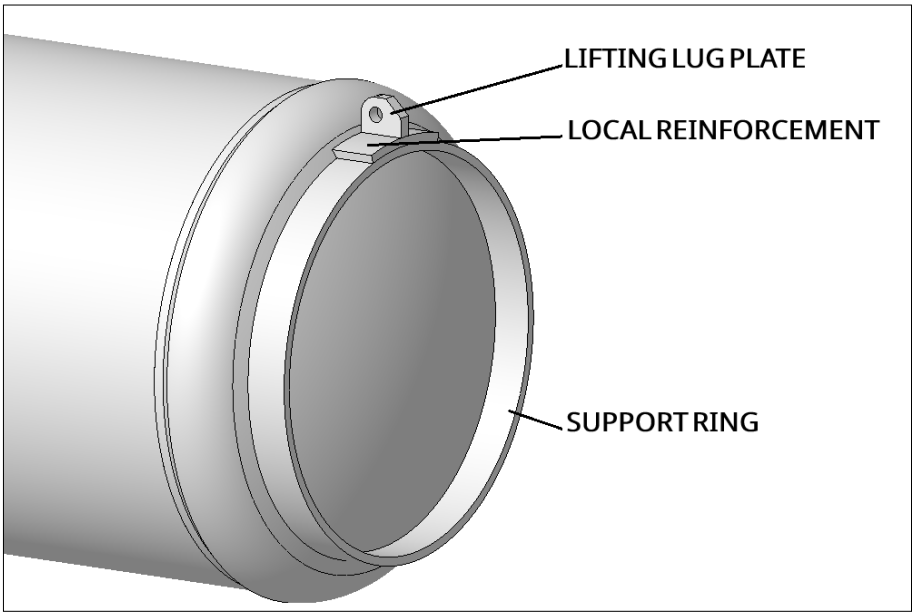

Figure 5: Welded lifting lug detail (typical).

NOTES:

- Depending on the suction can dimensions and head geometry, it is possible to design welded lifting lugs directly on the torispherical / ellipsoidal head without incorporating a support ring. This approach may be suitable for some pump sizes, provided that structural integrity is ensured by calculations or similar pumps were already produced.
- For critical applications—such as heavy and / or long barrels, or relatively small pump sizes lacking prior validation on similar applications—lifting lug design must be verified through **FEM** analysis (ref. paragraph 6.1).

4.2. Alternative Lifting Point Solution

The alternative lifting point solution is shown in *Figure 6* for the single component and in *Figure 7* for the pressure casing. It may be employed in these situations:

- When the process requires an insulated barrel, so that using the standard lifting point solution is not applicable.

COPY COMPLIANT to the original document resident on the computer system at the time of printing

- When sufficient space is available around the suction can shell and this solution is preferable respect to the standard one (e.g., for long barrels with long spans).

This solution adopts welded bosses on the cylindrical shell of the suction can, with their axes oriented perpendicular to the shell axis and positioned symmetrically at equal distances from the suction can's centre of gravity, as determined through a 3D model developed during the design phase. Each boss includes a threaded hole suitable for swivel lifting points. For special configurations—such as insulated barrels, suction cans with a suction flange on the shell, or wide but very short barrels—additional bosses (also shown in *Figure 6*) may be added around the periphery of the cylindrical shell. These are typically arranged in three pairs spaced at 120° intervals. This configuration allows better control of barrel rotation when resting on floor supports and facilitates the installation of support feet when the barrel is placed on the floor or transporter.

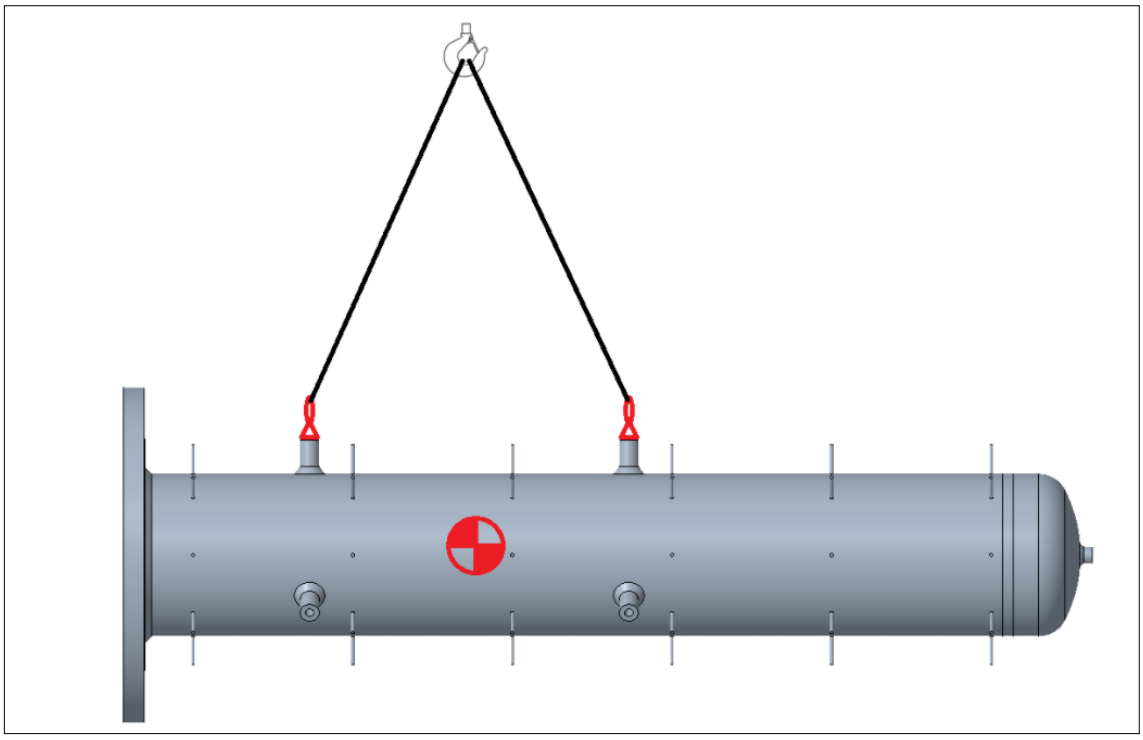

Figure 6: Typical horizontal lifting configuration with boss arrangement around barrel's centre of gravity.

Also, to achieve balanced lifting during pressure casing handling (see *Figure 7*), the bosses should be spaced so that the centre of gravity is positioned as close as possible to the midpoint between the lowest boss and the upper discharge head / elbow flange. This arrangement helps ensuring stable load distribution during horizontal lifting. For certain pump sizes, it may be feasible to install the upper swivel lifting points on the barrel flange (as shown in the *Figure 3*) instead of the discharge head / elbow. The final positioning of the swivel lifting points on the discharge head or the

COPY COMPLIANT to the original document resident on the computer system at the time of printing

elbow shall be defined on an order-specific basis, with appropriate threaded holes provided during the design phase to accommodate their installation.

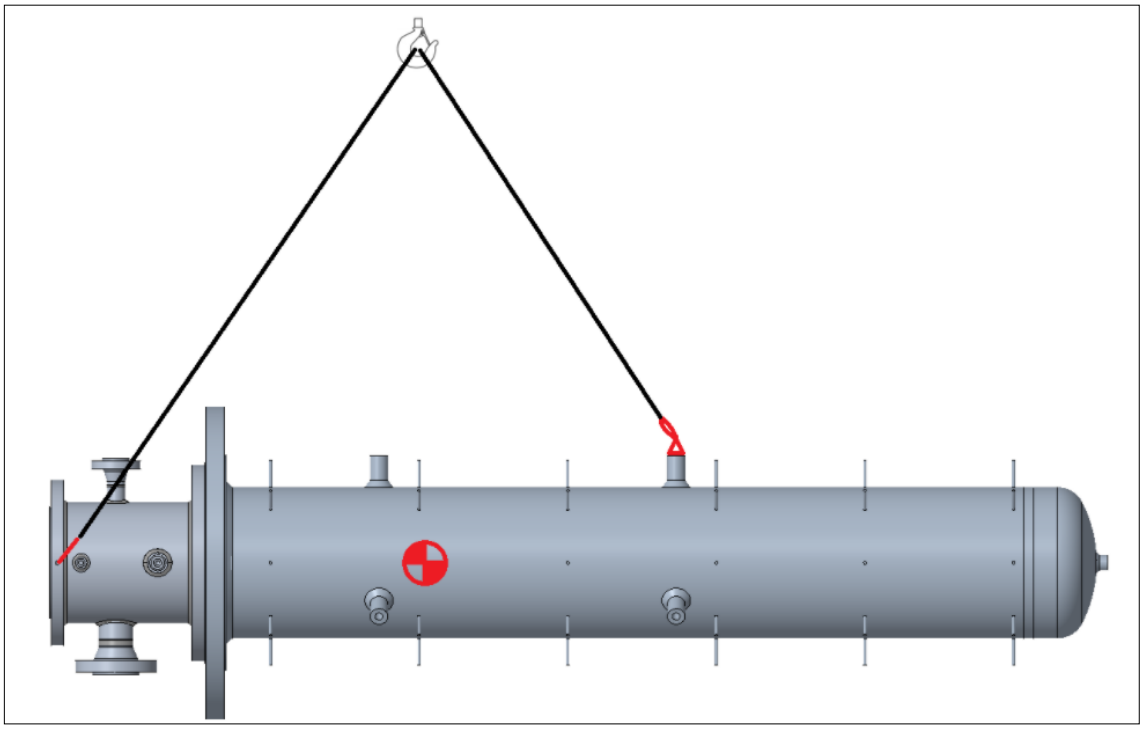

Figure 7: Typical horizontal lifting configuration for pressure casing lifting.

5. Welding requirements

All welded lifting points must be full penetration fill welded type. The typical welding sketch shown in the construction drawings shall correspond to those of *Figure 8*.

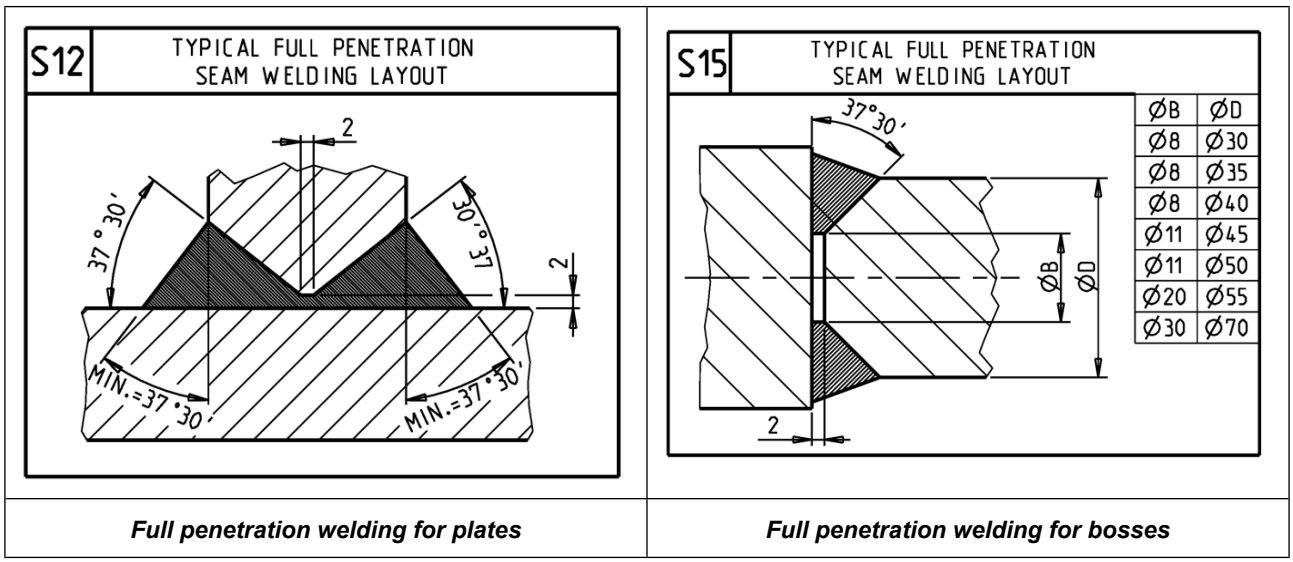

Figure 8: Typical welding schemes for lifting provisions.

COPY COMPLIANT to the original document resident on the computer system at the time of printing

As per API 610 XII edition, paragraph. 7.4.18.1:

"Lugs or trunnions that are attached by welding shall have continuous welds. These welds shall be 100% NDT tested in accordance with the applicable code (Table 11)".

The above-mentioned Table 11 of API 610 XII edition requires compliance with AWS D1.1/D1.1M or ISO 10721-2 (equivalent standard).

According to ISO 10721-2, the welds shall be evaluated with both **MT** and **UT**. Radiographic test is not mandatory.

Considering the above, the following is required for all welded lifting points:

- **MT** with test report.
- **UT** with test report.

6. Responsibilities

The responsibilities regarding the suction can and **VS6** / **VS7** pressure casing lifting are defined below.

6.1. Product Engineering

- **PD** shall add lifting provisions (lifting lug plates or bosses) to each suction can, to guarantee safe handling and lifting at workshop and / or at plant.
- **PD** is responsible for the selection of the proper lifting points solutions considering the process and / or the installation constraints.
- When bosses are used (paragraph 4.2) the **PD** designer:
  - shall verify the position of the barrel and the pressure casing's centers of gravity to ensure correct placement of the bosses.
  - shall confirm the **WLL** of the swivel lifting points used, referencing product catalogues to ensure suitability for the specific application.
- **PD** designer shall provide threaded holes for swivel lifting points on all barrel flanges and discharge heads / elbows, appropriate to lift both the suction can component and the pressure casing. The designer must also verify the **WLL** of the selected swivel lifting points by consulting manufacturer catalogues to ensure they are suitable for the specific application.
- **PD** designer shall include in the construction drawings the details for the type of welding required for lifting provisions in accordance with Chapter 5 "Welding requirements".
- **PT** is responsible for performing **FEM** calculations when required, as determined during the design phase (e.g., verification of welded lifting lug strength, suction can deflection under design loads, etc.). As general guidance for lifting lug strength assessment**:**

COPY COMPLIANT to the original document resident on the computer system at the time of printing

- Consider an Impact factor = 2 on applied loads.
- Consider Allowable stress = Yield Stress / 3 (as per API 610 XII, paragraph 7.4.18) of the actual material.

6.2. Quality control

- **QC** shall perform **NDT** required for welded points as per requirements outlined in the Chapter 5 “Welding requirements” and made available the test reports to the Final Documentation of the job.

6.3. Manufacturing

Manufacturing operators play a key role in the safe execution of suction can and pressure casing lifting operations. They shall consider what outlined in paragraph 3.1 “General recommendations”. In addition to ensuring equipment readiness and compliance with safety protocols, operators are responsible for setting up supports, guiding the suction can during movement, and ensuring correct engagement of lifting provisions. Their role is especially critical during orientation changes and final positioning, where precise alignment and coordination with rigging personnel are essential. Operators must also monitor environmental conditions, anticipate potential interferences, and maintain clear communication throughout the lifting process to ensure safe and controlled operations.

7. References

- API 610 XII edition

COPY COMPLIANT to the original document resident on the computer system at the time of printing